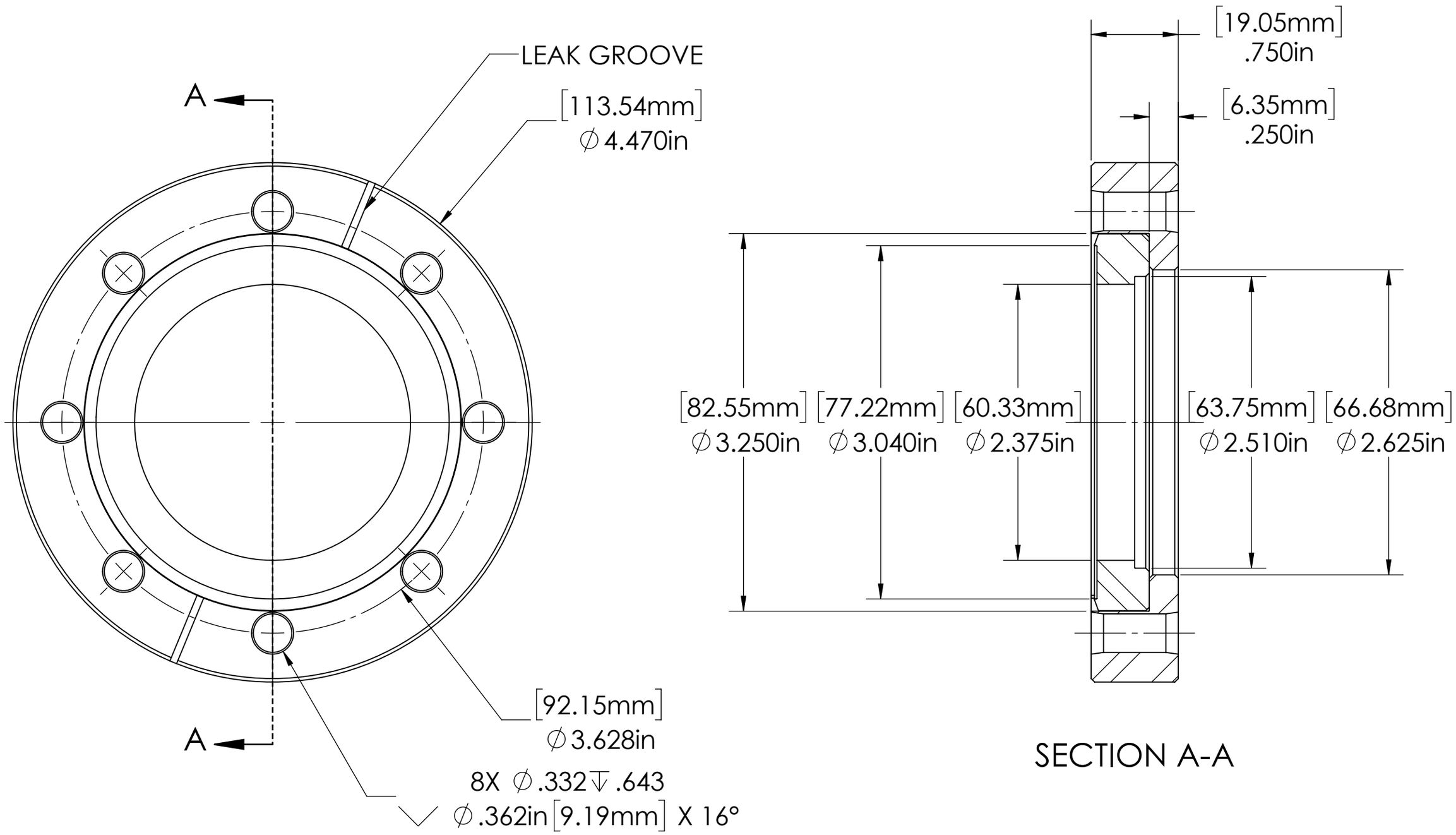

For Reference Only

Description	Reference Number	Part Number
4.5" X 2.5" (114mm X 63.8mm) ROTATABLE, CLEARANCE, 304SS	F450250R	100021