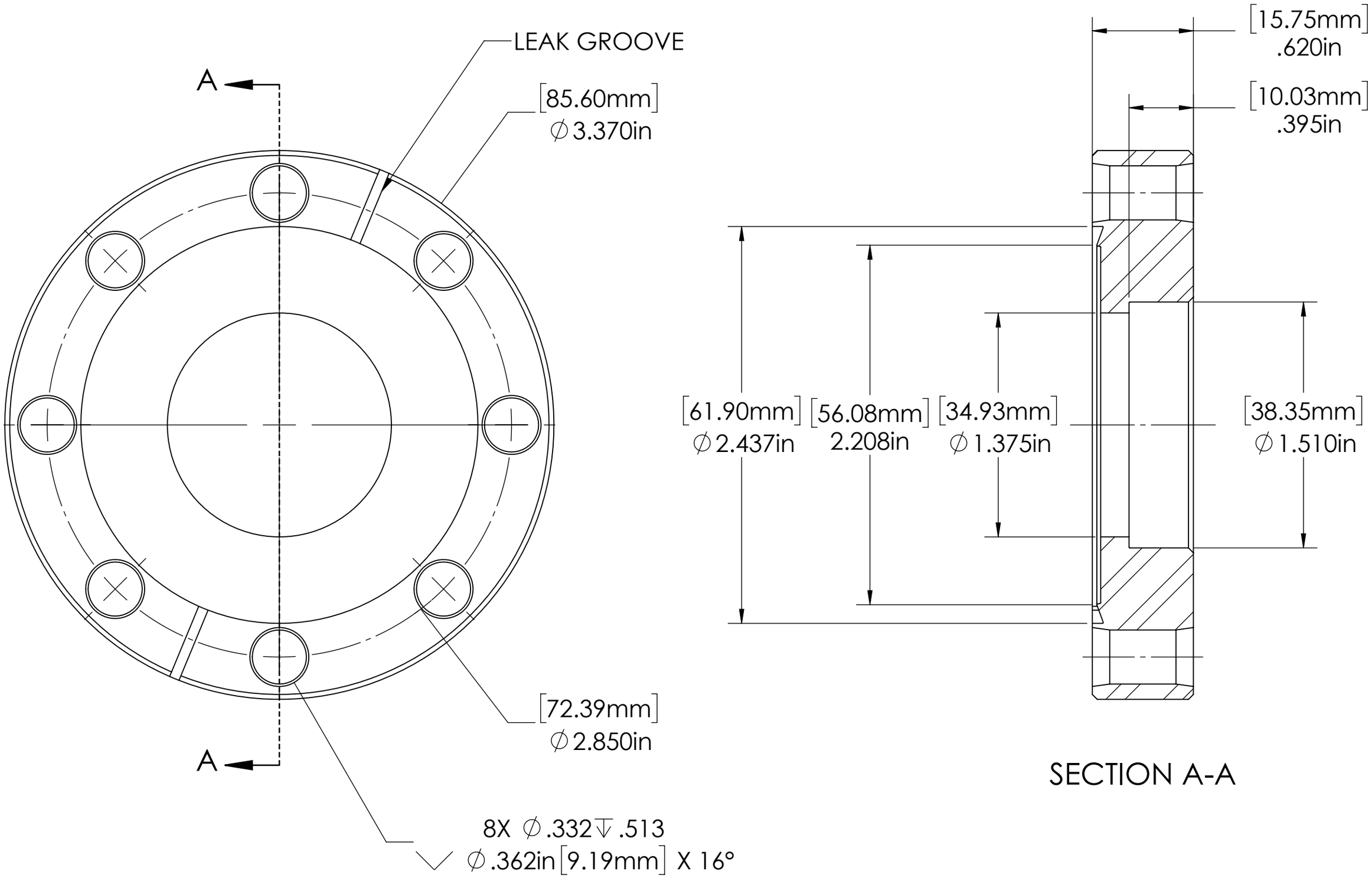

For Reference Only

Description	Reference Number	Part Number
FLANGE, 3.38" X 1.5" (85.852mm X 38.1mm), 304SS	F338000	110016