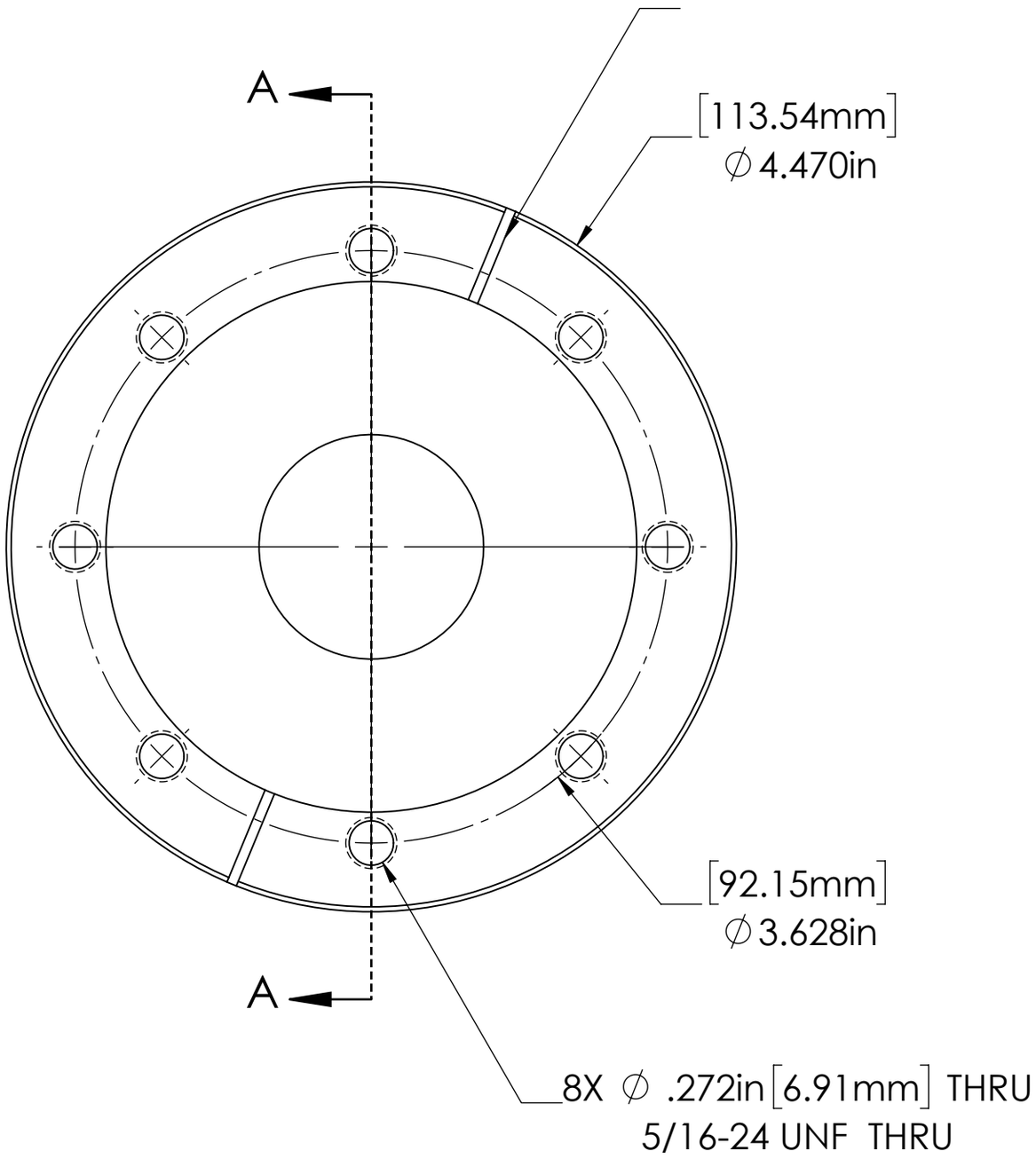

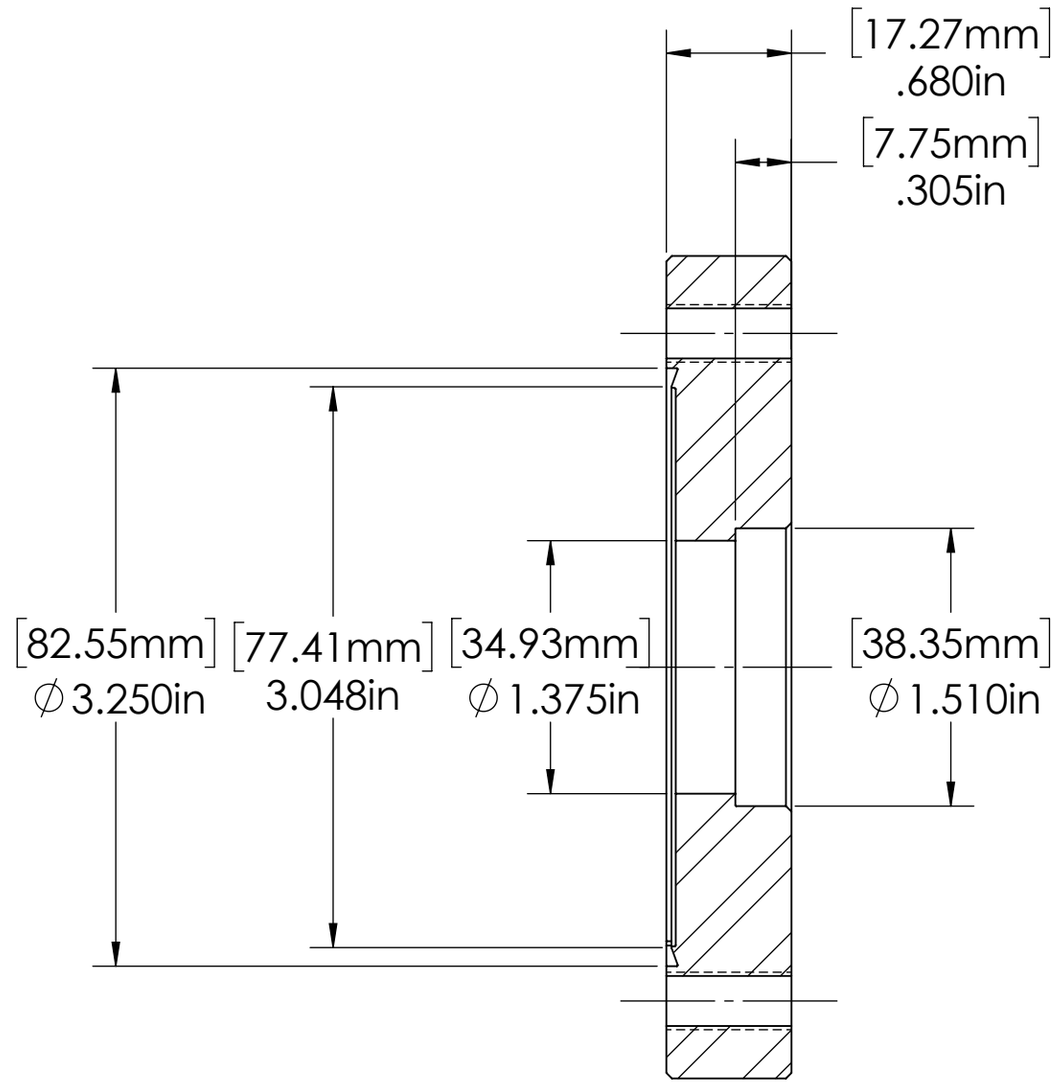

SECTION A-A

For Reference Only

Description	Reference Number	Part Number
FLANGE, 4.5" X 1.5, TAPPED 304SS	F450150T	130019