4 Vacuum Measurement

Section 4

Introduction 288

Bourdon Gauge 290

Thermocouple Gauge Tubes
- Introduction 291
- Del-Seal™ CF Mount 293
- VCR® Mount 293
- NPT Mount 293

Ionization Gauge Tubes
- Nude IGT 294
- Glass Envelope IGT 298

Vacuum Measurement

Introduction

MDC vacuum gauge tubes

- Bourdon gauge
- Thermocouple gauge tube
- Enclosed ionization gauge tube
- Nude ionization gauge tube

All dimensions in this catalog are given in inches unless specified otherwise.

Bourdon Gauge

Deflection gauges measure true pressure via deflection of a bourdon tube, independent of the type of gas in a system. Bourdon tubes are constructed in either C-tube or helical coil geometries and of these two, helical Bourdon tubes provide the greatest sensitivity.

MDC Bourdon gauges are designed for rough vacuum measurements in the range of 30 inches of mercury and positive pressures to 30psig. As a general rule, all vacuum components and chambers are rated for vacuum service and should never be internally pressurized. Bourdon gauges are offered with Del-Seal™ CF metal seal flanges, Kwik-Flange™ ISO KF flanges and male NPT pipe thread fittings.

Thermocouple Gauge Tube

MDC thermocouple gauge tubes offer fast and reliable vacuum measurement from 1 to $1x10^{-4}$ Torr.

Thermocouple gauge tubes consist of two basic components, a resistive filament and a thermocouple junction used to measure its temperature. Thermocouple gauge tubes operate on the thermal conductivity principle. Basically, they measure the thermal conductivity of a residual gas inside a vacuum system, or its ability to conduct heat away from a heated filament. The higher the pressure inside a vacuum system the cooler the filament or conversely, the lower the gas pressure the hotter the filament becomes.The thermocouple junction inside the gauge tube is positioned on the heated filament and is used to monitor its temperature during system evacuation. A temperature rise or drop in the filament produces a potential rise or drop in the thermocouple junction. This potential in millivolts, is then calibrated to microns in a thermocouple gauge controller.

Because thermocouple gauge tubes and control electronics are available from a multitude of manufacturers, it is important to note that individual thermocouple gauge tubes are designed to operate at specific filament current ratings, which should be carefully matched with a control instrument's specifications. Always refer to the control electronics manufacturer for specifications on filament current requirements before purchasing or installing a thermocouple gauge tube.

MDC UHV gauge tubes feature all-welded construction and stainless steel casing tubes that are bakeable to 150°C. Electrical connections are glass insulated and employ a standard eight pin interface with a polarized center post. They are offered with Del-Seal™ CF flanges and Swagelok's VCR® fittings. HV gauge tubes are supplied with male NPT pipe thread fittings and a nickel plated steel shell assembly for maximum corrosion resistance and bakeable to 150°C.

Thermocouple gauge tubes are expendable vacuum components and must be replaced periodically. Most gauges are typically calibrated for service in air (nitrogen) and experience extreme variations in calibration when in the presence of other gases, subsequently leading to erroneous vacuum measurement readings. An inexpensive solution would be to include a non-gas-dependent gauge such as a Bourdon gauge to verify calibration.

Glass Enclosed Ionization Gauge Tube

MDC glass enclosed ionization gauge tubes are designed for high and ultrahigh vacuum

Bourdon type gauges page 290

Thermocouple gauge tube page 291

measurements between $1x10^{-3}$ to $2x10^{-10}$ Torr. Glass enclosed ionization tubes, commonly referred to as a Bayard-Alpert gauge tubes, consist of several components including a resistive filament, a positively charged grid and a negatively charged collector. The resistive filament is heated to incandescence for the purpose of emitting electrons. The grid, a positively charged wire, coiled in the shape of a spiral, attracts and accelerates filament emitted electrons. The collector, a negatively charged wire, is strategically placed in the path of oncoming electrons. As electrons collide with air molecules inside the tube, the air molecules lose an electron and become positively charged or ionized and thus attracted to the negatively charged collector. Upon colliding with the collector air molecules regain their lost electron and return to their original neutral charge. The flow of electrons from the collector to air molecules is measured and calibrated for vacuum measurement. The number of air molecules is directly proportional to their ionization and in direct proportion to the flow of electrons surrendered by the collector.

Nude Ionization Gauge Tube

MDC nude ionization gauge tubes are designed for high and ultrahigh vacuum measurements between $1x10^{-3}$ to $2x10^{-11}$ Torr. Like their glass enclosed counterparts, these are also hot cathode ionization types. The main difference being their method of construction. Nude gauges allow for easy replacement of perishable filaments and the added durability of ceramic-to-metal electrical feedthrough insulation which makes them bakeable to 450°C. Two nude gauge styles are offered, these are resistive heating or electron bombardment degas.

Typical Glass Envelope Ionization Gauge Tube

Shown with Kovar® side arm

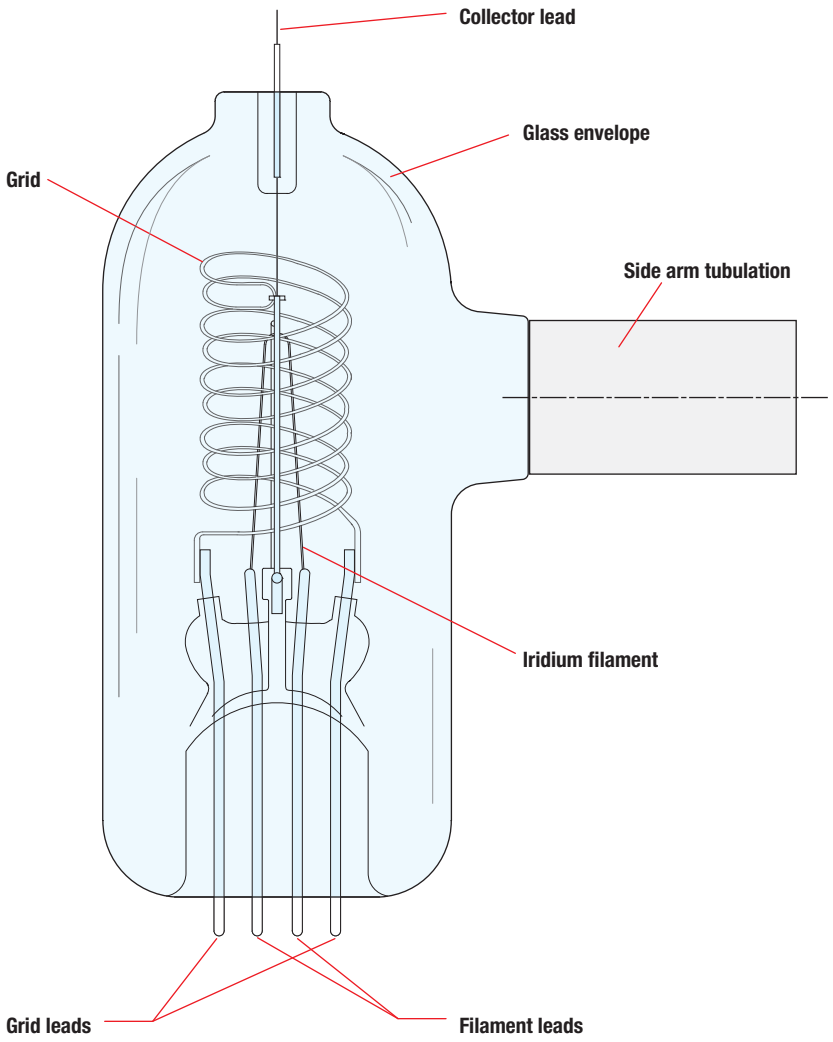

Nude ionization gauge tube page 294

Glass enclosed ionization gauge tube page 298

Replacement filaments page 294

Vacuum Measurement

Bourdon Gauge

LOW VACUUM SERIES

Pressure / Vacuum Gauge

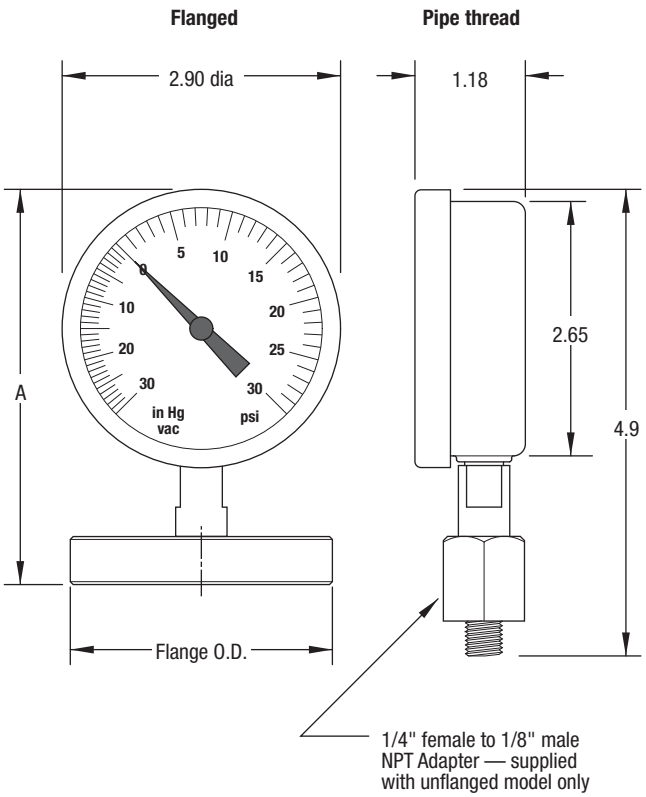

- 2-1/2" diameter gauge face
- On NPT model only, removable adapter allows either 1/8" or 1/4" NPT thread mounting

Features

- Large easy-to-read dial
- 30 inch Hg to 30 PSIG range
- Del-Seal™ CF, Kwik-Flange™ or NPT mounting
- Stainless steel construction
- 150°F maximum bakeout temperature

Description

Provides a quick visual check of roughing line pressures.

Note that these gauges are intended for vacuum use with other MDC components and as such are not rated for oxygen service.

NOMINAL FLANGE	FLANGE REFERENCE	FLANGE O.D.	A	WT LBS	REFERENCE	PART NUMBER
FLANGED						
1-1/3	F133000	1.33	4.0	1/2	075-VG	432014
2-1/8	F218000	2.11	4.2	3/4	100-VG	432015
2-3/4	F275000	2.73	4.2	3/4	150-VG	432016
NW16	K075	1.18	4.2	1/2	K075-VG	432010
NW25	K100	1.57	4.2	1/2	K100-VG	432011
NW40	K150	2.16	4.2	3/4	K150-VG	432012
NW50	K200	2.95	4.2	3/4	K200-VG	432013
PIPE THREAD						
NPT THREAD	Includes one 1/4" FEMALE TO 1/8" MALE air fitting			1/2	VG	432020

Thermocouple Gauge Tubes

ULTRAHIGH & HIGH VACUUM SERIES

Features

- 0.1 micron to 1000 micron Hg range
- UHV and HV tubes
- Interchangeable with other brands
- Choice of connectors

General Description

MDC Thermocouple Gauge Tubes offer a fast and reliable means of measuring vacuum from 0.1 to 1000 micron Hg. They can be read continuously and remotely under severe operating conditions.

Individual thermocouple gauges operate with specific heater current ratings. Gauge tubes must be matched to the instrument's specifications. Refer to the manufacturer's instructions for heater current and thermocouple output. Note that although some units are fitted with eight pins, only four pins are actively used. See tube pin-out configurations on page 292.

UHV Series Tubes feature all-welded construction, stainless steel casings, and are bakeable to 150°C. Electrical connections are glass insulated. They are offered with Del-Seal™ CF mini-flanges and Cajon VCR® fittings.

HV Series Tubes are supplied with nickel plated steel shell and stem assemblies for corrosion resistance. They are bakeable to 150°C.

Thermocouple Gauge Parts

Simplified TGT-2AM shown

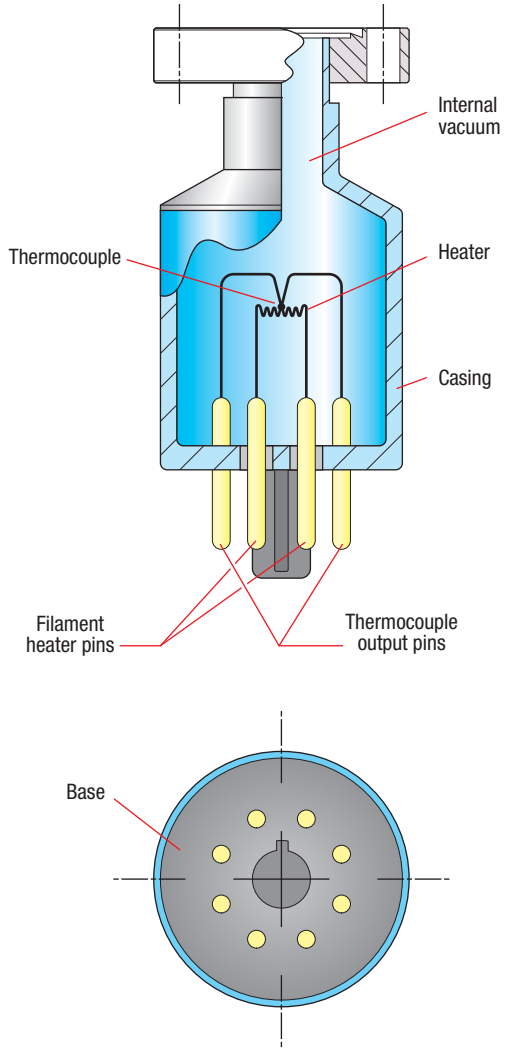

Vacuum Measurement

Thermocouple Gauge Tubes

Tube Interchange / Cross Reference Table

Several of the MDC tubes will directly interchange with models of various manufacturers as noted in the Cross Reference Table. Standard Series tubes are equal or superior in performance while the High Temperature / UHV Series offer even higher specifications. Other models are available on request. Note that although some units are fitted with eight pins, only four pins are actively used.

MANUFACTURER	MODEL NUMBER	MDC REFERENCE	MDC PART NUMBER
TELEVAC	2A	TGT-2A	511013
VARIAN / NRC	531	TGT-5310	511008
VARIAN / NRC	531	TGT-531M	511001
VARIAN / NRC	531	TGT-531W	511003
CONSOLIDATED CVC	GTC-004	TGT-1504	511005
VEECO INSTRUMENTS	DV-1M	TGT-1000	511006
HASTINGS-RAYDIST	DV-6M	TGT-6000	511007

Tube Pin-Out

Generally, for all thermocouple gauge tubes the pin out patterns employ four active pins. Two of the pins supply current to the heater inside the gauge head and two of the pins provide a return signal which is dependent on pressure inside the vacuum vessel.
In the case of gauge tubes having eight pins, four of the pins are active and the other four are used for support only.

Thermocouple Gauge Tube Pin-Out

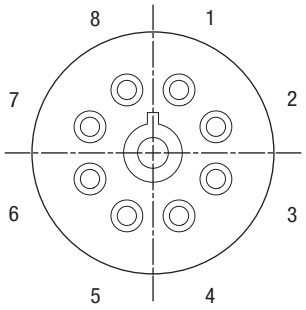

REFERENCE	PART NUMBER	HEATER PINS		THERMOCOUPLE PINS TC+	TC-
TGT-2A	511013	1	8	7	2
TGT-2AM	511010	1	8	7	2
TGT-1518	511004	1	7	5	3
TGT-1518M	511000	1	7	5	3
TGT-1518W	511002	1	7	5	3
TGT-5310	511008	1	3	5	7
TGT-531M	511001	1	3	5	7
TGT-531W	511003	1	3	5	7
TGT-531S	511009	1	3	5	7
TGT-1504	511005	1	7	5	3
TGT-1000 [1]	511006	3	5	7	-
TGT-6000 [1]	511007	3	5	7	-

[1] AC connection on heater pins; DC connection on TC pins

1-1/3" Del-Seal™ CF

• TGT-2AM

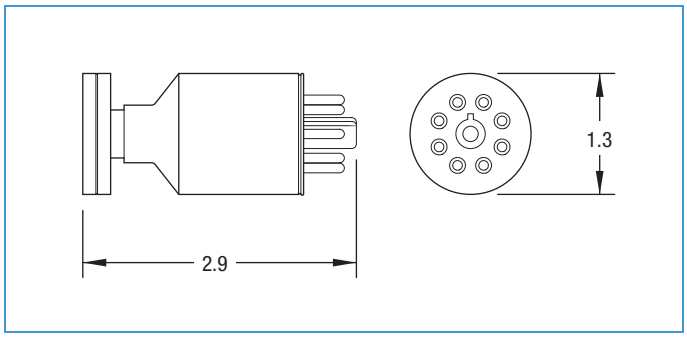

- 150°C bakeout
- UHV compatible
- Del-Seal™ CF flange
- Stainless steel construction

NOMINAL FLANGE	PRESSURE RANGE (µHg)	HEATER CURRENT (mA)	RESPONSE TIME (sec)	OUTPUT @ 55Ω and .01µHg (mV)	WT LB	REFERENCE	---PART NUMBER
1-1/3	0.1 - 1000	95	< 0.2	9.1	1/4	TGT-2AM	511010
1-1/3	0.1 - 1000	15 - 18.5	< 0.1	10	1/4	TGT-1518M	511000
1-1/3	0.1 - 2500	163	< 0.1	13.5 - 14.5	1/4	TGT-531M	511001

3/4" Hex VCR®

• TGT-1518W

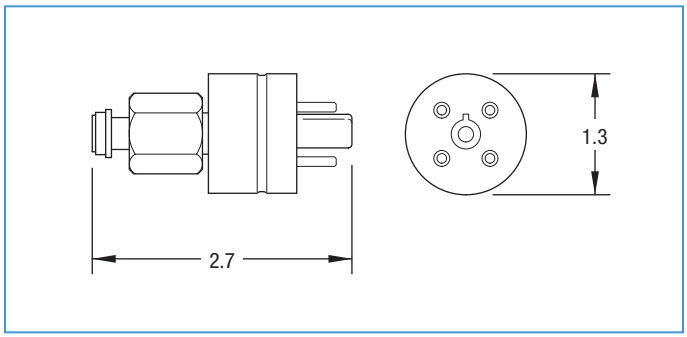

- 150°C bakeout
- UHV compatible
- 1/4" Hex VCR® fitting
- Stainless steel construction

NOMINAL FITTING	PRESSURE RANGE (µHg)	HEATER CURRENT (mA)	RESPONSE TIME (sec)	OUTPUT @ 55Ω and .01µHg (mV)	WT LB	REFERENCE	PART NUMBER
3/4" VCR®	0.1 - 1000	15 - 18.5	< 0.1	10	1/4	TGT-1518W	511002
3/4" VCR®	0.1 - 2500	163	< 0.1	13.5 - 14.5	1/4	TGT-531W	511003

1/8" NPT

• TGT-2A

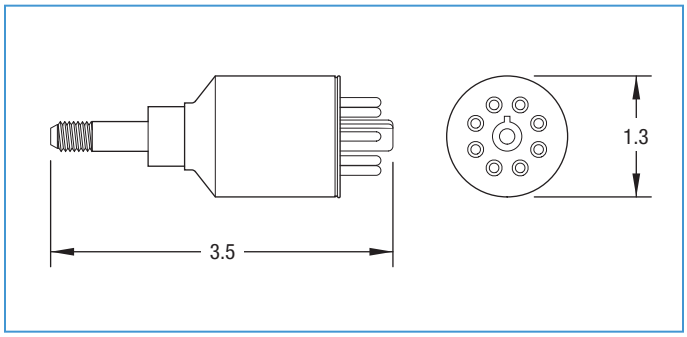

- 150°C bakeout
- HV compatible
- Nickel plated steel construction
- Stainless steel construction on TGT-531S

THREAD SIZE (NPT)	PRESSURE RANGE (µHg)	HEATER CURRENT (mA)	RESPONSE TIME (sec)	OUTPUT @ 55Ω and .01µHg (mV)	WT LB	REFERENCE	PART NUMBER
1/8"	0.1 - 1000	95	< 0.2	9.1	1/4	TGT-2A	511013
1/8"	0.1 - 1000	15 - 18.5	< 0.1	10	1/4	TGT-1518	511004
1/8"	0.1 - 2500	163	< 0.1	13.5 - 14.5	1/4	TGT-5310	511008
1/8"	0.1 - 2500	163	< 0.1	13.5 - 14.5	1/4	TGT-531S	511009
1/8"	0.1 - 1000	15 - 18.5	< 0.1	9.6	1/4	TGT-1504	511005
1/8"	0.1 - 1000	130 - 135	< 0.1	10	1/4	TGT-1000	511006
1/8"	0.1 - 1000	20	< 0.1	10	1/4	TGT-6000	511007

Vacuum Measurement

Nude Ionization Gauge Tubes

Nude Ionization Gauge Tubes

ULTRAHIGH VACUUM SERIES

Features

- 10^{-3} to 10^{-10} Torr range
- 2-3/4" Del-Seal™ CF flange mounted
- Resistive heating degas
- Replaceable filament assemblies
- Mount in any position
- Bayard-Alpert type tube

Vacuum Specifications

Vacuum Range	10^{-3} to $4x10^{-10}$ Torr
Maximum Operating Pressure	$1x10^{-3}$ Torr
Sensitivity ±20%	10 Torr
X-ray Limit	$4x10^{-10}$ Torr

Construction Specifications

Flange	304ss
Grid	Molybdenum-clad Platinum
Filament	Single: Iridium
	Dual: Tungsten
Collector	Tungsten
Shield Coating	Platinum
Base Leads	Soft Nickel, 0.060" dia.
Collector Lead	Soft Nickel, 0.040" dia.

Operating Specifications

Collector	-30 Volts DC
Grid	+150 Volts DC
Filament	+30 Volts DC
Filament Voltage	3 - 5 Volts
Filament Current	4 - 6 Amps
Degas by I^2R	70 Watts
Emission	10 mA
Maximum Bakeout Temperature	450°C

Pin-Out Pattern

Single Filament

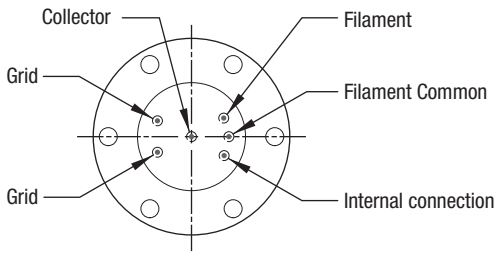

Dual Filament

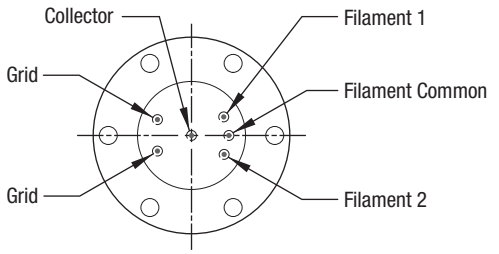

- All pins 0.060 diameter
- Requires minimum 1.37" I.D. clearance for installation

I²R degas

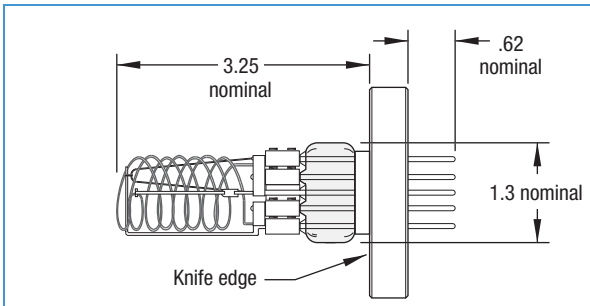

- High Temperature
- UHV compatible
- Del-Seal™ CF flange
- Replaceable filaments

NOMINAL FLANGE	DESCRIPTION	WT LB	REFERENCE	PART NUMBER
2-3/4	TWIN TUNGSTEN FILAMENT, BAYARD-ALPERT GAUGE	3/4	BATT	432000
2-3/4	SINGLE IRIDIUM FILAMENT, BAYARD-ALPERT GAUGE	3/4	BAIR	432002

Filaments

Twin Tungsten Filament

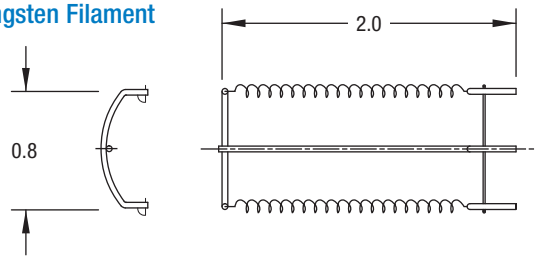

- High Temperature
- UHV compatible
- Replacement filament assemblies for above ionization gauge tubes

REPLACEMENT FOR	DESCRIPTION	WT LB	REFERENCE	PART NUMBER
BATT	TWIN TUNGSTEN FILAMENT, BAYARD-ALPERT GAUGE	3/4	BART	432001
BAIR	SINGLE IRIDIUM FILAMENT, BAYARD-ALPERT GAUGE	3/4	BARI	432003

Tube Interchange / Cross Reference Table

Several of the MDC tubes will directly interchange with models of various manufacturers as noted in the Cross Reference Table. While tubes may have identical electrical specifications with tubes from other manufacturers not listed, pin-out dimensions may vary.

DESCRIPTION	REPLACEMENT FOR GRANVILLE-PHILLIPS	REPLACEMENT FOR PERKIN-ELMER	REPLACEMENT FOR VARIAN	MDC REFERENCE	MDC PART NUMBER
SINGLE IRIDIUM FILAMENT, BA GAUGE TUBE	274028	-	-	BAIR	432002
REPLACEMENT FILAMENT FOR 432002	274029	-	-	BARI	432003

Vacuum Measurement

Nude Ionization Gauge Tubes

Ionization Gauge Tubes

ULTRAHIGH VACUUM SERIES

Features

- 10^{-3} to 10^{-11} Torr range
- 2-3/4" Del-Seal™ CF flange mounted
- Electron Bombardment degas
- Replaceable filament assemblies
- Mount in any position

Vacuum Specifications

Vacuum Range	10^{-3} to $2x10^{-11}$ Torr
Maximum Operating Pressure	$1x10^{-3}$ Torr
Sensitivity ±20%	25 Torr
X-ray Limit	$2x10^{-11}$ Torr

Construction Specifications

Flange	304ss
Grid	Tungsten
Filament	Dual: Tungsten or Iridium
Collector	Tungsten
Shield Coating	Platinum
Base Leads	Soft Nickel, 0.060" dia.
Collector Lead	Soft Nickel, 0.040" dia.

Operating Specifications

Collector	0 Volts DC
Grid	+180 Volts DC
Filament	+30 Volts DC
Filament Voltage	3 - 4.5 Volts
Filament Current	2 - 4 Amps
Degas by EB	30-40 Watts
Emission	4 mA
Maximum Bakeout Temperature	450°C

Pin-Out Pattern

Dual Filament

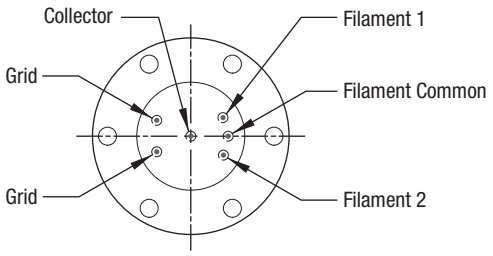

- All pins 0.060 diameter
- Requires minimum 1.37" I.D. clearance for installation

EB degas

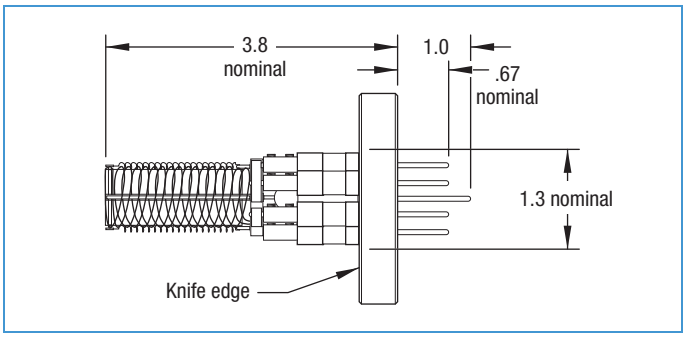

- High Temperature
- UHV compatible
- Del-Seal™ CF flange
- Stainless steel construction

NOMINAL FLANGE	DESCRIPTION	WT LB	REFERENCE	PART NUMBER
2-3/4	TWIN TUNGSTEN FILAMENT, UHV GAUGE	3/4	UHTT	432004
2-3/4	TWIN IRIDIUM FILAMENT, UHV GAUGE	3/4	UHIR	432006

Filaments

Twin Tungsten Filament

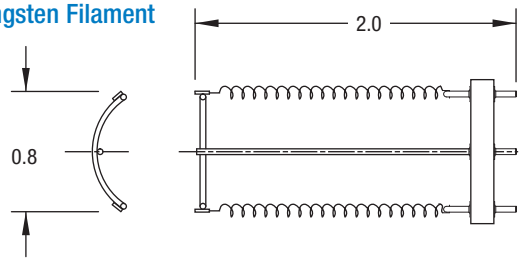

- High Temperature
- UHV compatible
- Replacement filament assemblies for above ionization gauge tubes

REPLACEMENT FOR	DESCRIPTION	WT LB	REFERENCE	PART NUMBER
UHTT	TWIN TUNGSTEN FILAMENT, UHV GAUGE	3/4	UHRT	432005
UHIR	TWIN IRIDIUM FILAMENT, UHV GAUGE	3/4	UHRI	432007

Tube Interchange / Cross Reference Table

Several of the MDC tubes will directly interchange with models of various manufacturers as noted in the Cross Reference Table. While tubes may have identical electrical specifications with tubes from other manufacturers not listed, pin-out dimensions may vary.

DESCRIPTION	REPLACEMENT FOR GRANVILLE-PHILLIPS	REPLACEMENT FOR PERKIN-ELMER	REPLACEMENT FOR VARIAN	MDC REFERENCE	MDC PART NUMBER
TWIN TUNGSTEN FILAMENT, UHV GAUGE TUBE	274022	605-7673	-	UHTT	432004
REPLACEMENT FILAMENT FOR 432004	274024	605-7671	-	UHRT	432005
TWIN IRIDIUM FILAMENT, UHV GAUGE TUBE	274023	605-7672	-	UHIR	432006
REPLACEMENT FILAMENT FOR 432006	274025	605-7676	-	UHRI	432007

Vacuum Measurement

Glass Envelope Ionization Gauge Tube

Side Arm Glass Envelope Ionization Gauge Tubes

ULTRAHIGH & HIGH VACUUM SERIES

Features

- Non-burnout design allows momentary exposure to atmosphere
- Choice of Pyrex®, Kovar® and Del-Seal™ CF flange
- ISO Kwik-Flange™ optional

Vacuum Specifications

Vacuum Range	10^{-3} to $2x10^{-10}$ Torr
Maximum Operating Pressure	$1x10^{-3}$ Torr
Pumping Speed (Ionic)	0.06 liters/sec - N_2 (1 mA)
X-ray Limit	$2x10^{-10}$ Torr - N_2 (approx.)

Construction Specifications

Envelope	Nonex
Grid	"Non-Sag" Tungsten 0.025" dia.
Filament	Hairpin thoria-coated iridium
Collector	Tungsten, 0.010" dia.
Shield Coating	Platinum, internally connected to filament
Base Leads	Soft Nickel, 0.060" dia.
Collector Lead	Soft Nickel, 0.040" dia.
Internal Volume	220cc (not including tubulation)

Operating Ratings

Collector	0 Volts DC (ground)
Shield	Internally connected to filament
Grid	+150 Volts DC to ground
Filament	+30 Volts DC to ground
Filament Volts (AC)	4.0 Volts
Filament Current (AC)	3.5 Amps (1 mA grid current)
Absolute Max. Fil. Volts (AC)	6.0 Volts
Absolute Max. Fil. Current (AC)	6.0 Amps
Absolute Max. Fil. Temperature	1400°C

Pin-Out Pattern

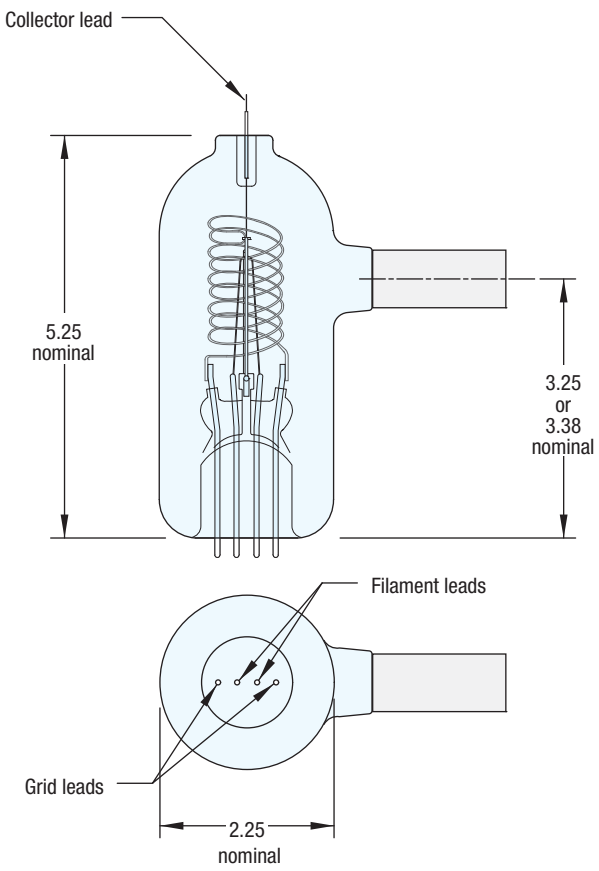

- For both Grid and Filament leads, one is positive and the other is ground - It does not matter which lead is positive and which lead is ground.
- All four bottom leads are in a single line.
- Pin-out pattern is the same industry-wide.

Del-Seal™ CF Flange

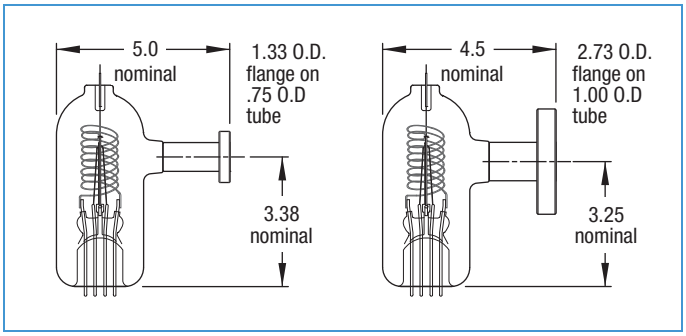

- UHV compatible
- Del-Seal™ CF flange

NOMINAL FLANGE	DESCRIPTION	WT LB	REFERENCE	PART NUMBER
1-1/3	.75" TUBE WITH 1-1/3" DEL-SEAL FLANGE	1/2	IGT-075-D	432023
2-3/4	1.00" TUBE WITH 2-3/4" DEL-SEAL FLANGE	1/2	IGT-100-D	432026

Tubulated

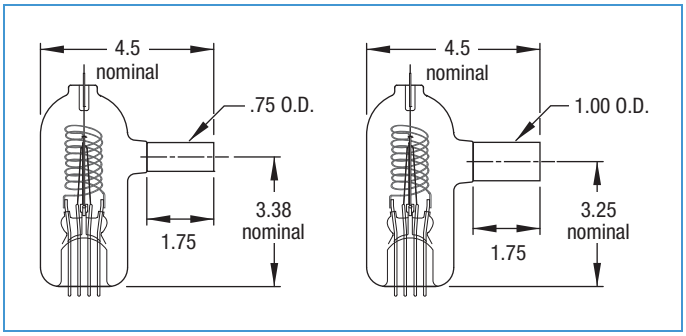

- HV compatible
- Pyrex® tube or Kovar® sleeve

METHOD OF CONNECTION	DESCRIPTION	WT LB	REFERENCE	PART NUMBER
PYREX® TUBE				
3/4	.75" TUBE	1/2	IGT-075-P	432021
1	1.00" TUBE	1/2	IGT-100-P	432024
KOVAR® SLEEVE				
3/4	.75" TUBE	1/2	IGT-075-K	432022
1	1.00" TUBE	1/2	IGT-100-K	432025

Tube Interchange / Cross Reference Table

Several of the MDC tubes will directly interchange with models of various manufacturers as noted in the Cross Reference Table. Exact pin-out dimensions may vary, but the pattern is the same industry-wide.

DESCRIPTION	REPLACEMENT FOR GRANVILLE-PHILLIPS	PERKIN-ELMER	VARIAN	MDC REFERENCE	MDC PART NUMBER
DEL-SEAL, 1-1/3" NOMINAL SIZE	274020	-	-	IGT-075-D	432023
DEL-SEAL, 2-3/4" NOMINAL SIZE	274008	605-7152	571-K2471-303	IGT-100-D	432026
PYREX WITH GRADED SEAL, 3/4" TUBE	274002	-	-	IGT-075-P	432021
PYREX WITH GRADED SEAL, 1" TUBE	274005	-	-	IGT-100-P	432024
KOVAR WITH GRADED SEAL, 3/4" TUBE	274003	605-7000	571-K2471-305	IGT-075-K	432022
KOVAR WITH GRADED SEAL, 1" TUBE	274006	-	571-K2471-302	IGT-100-K	432025